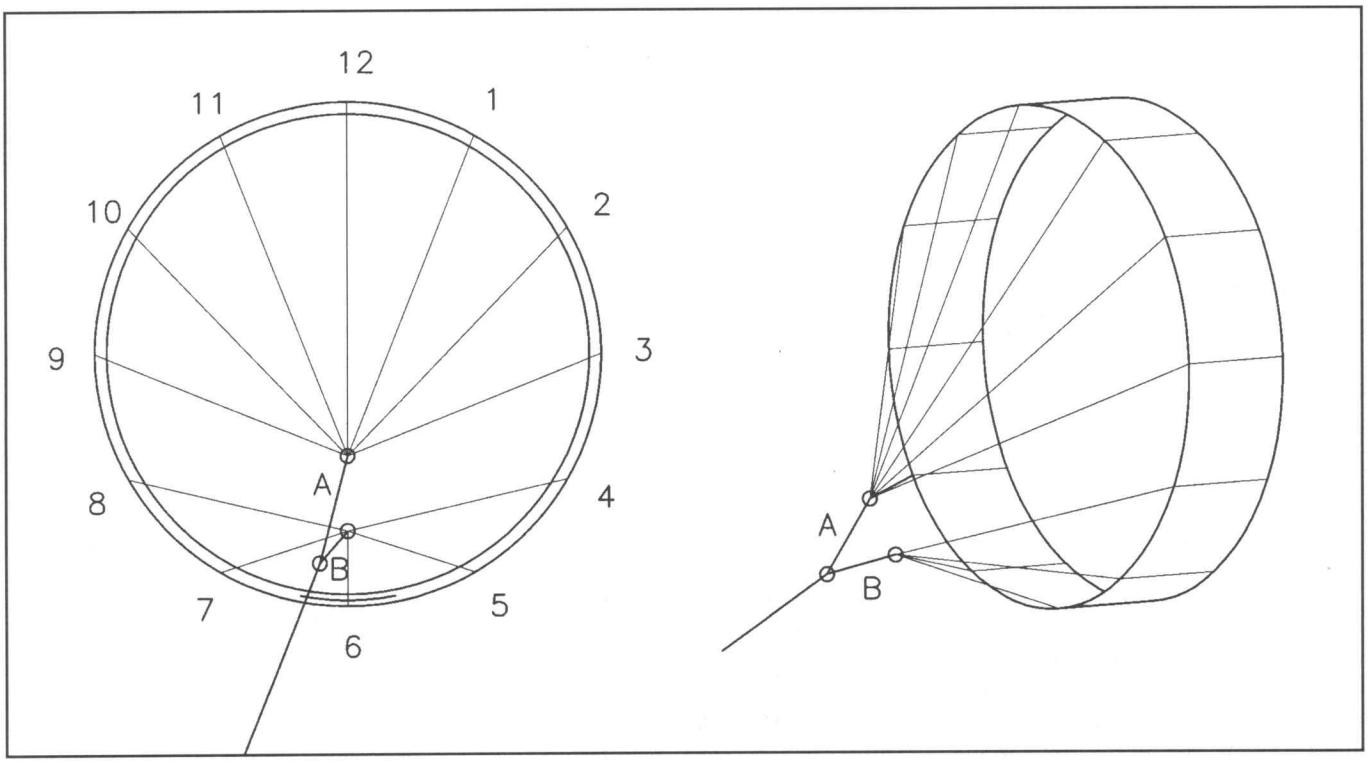


Lengten tomen en verbindingslijn in cm:

| | | | |
|---|---|---|---|
| 1. | 174 | 8. | 127 |
| 2. | 159 | 9. | 137,5 |
| 3. | 137,5 | 10. | 159 |
| 4. | 127 | 11. | 174 |
| 5. | 100 | 12. | 178 |
| 6. | 90 | A. | 31 |
| 7. | 100 | B. | 1 |

Omtrek: **3,5 m x 40 cm.** In neuszijde Ø2 mm gerold glasfiber. Loodveter 50 cm.
Lengten tomen en verbindingslijn in cm:

| | | | |
|---|---|---|---|
| 1. | 82,5 | 4. | 64 |
| 2. | 79 | 5. | 49,5 |
| 3. | 70 | 6. | 45 |
| 7. | 49,5 | | |
| 8. | 64 | | |
| 9. | 70 | | |
| 10. | 79 | | |
| 11. | 82,5 | | |
| 12. | 83 | | |
| A. | 11 | | |
| B. | 11 | | |

Omtrek: **5 m x 40 cm.** In neuszijde Ø 3 mm gerold glasfiber. Loodveter 68 cm.
Lengten tomen en verbindingslijn in cm:
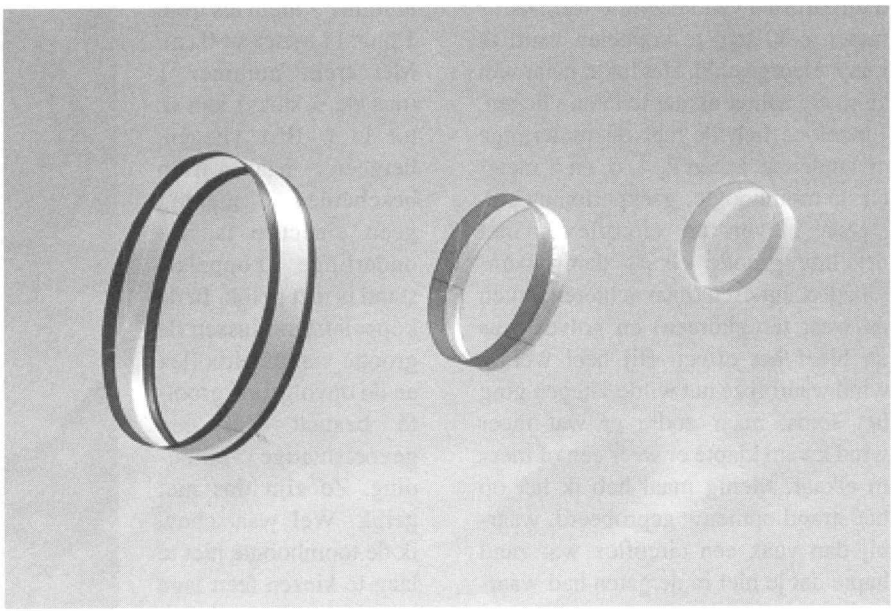
| | | | |
|---|---|---|---|
| 1. | 118 | 8. | 85 |
| 2. | 110 | 9. | 97 |
| 3. | 97 | 10. | 110 |
| 4. | 85 | 11. | 118 |
| 5. | 68 | 12. | 121 |
| 6. | 57 | A. | 19 |
| 7. | 68 | B. | 3 |